Hydronic Alternatives™

Best Hydronic Approach

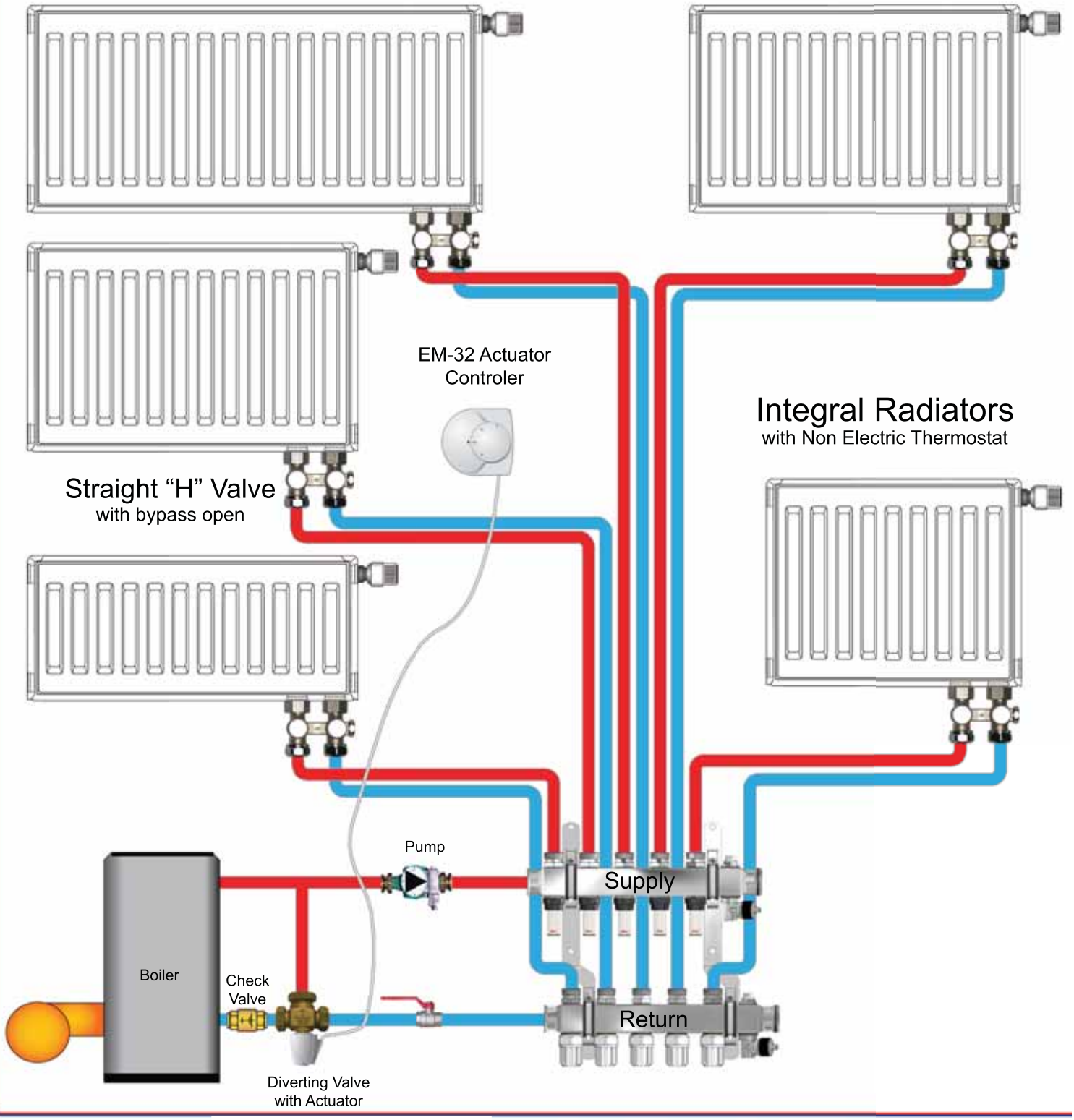

www.hydronicalternatives.com
phone 413.543.8733 fax 413.543.8737
E-mail : info@hydronicalternatives.com
4 New Park Road,
East Windsor, CT 06088