# OEM-Actuator 24 V

The OEM-Actuator 24 V is a thermoelectric actuator for opening and closing valves on heating circuit distributors of concealed floor heating and cooling systems.
The OEM-Actuator has been developed especially for customer-specific usage in the OEM business. Features, as protection in case of leaky valves, compact and modern casing, versions in normally closed and normally open, valve adapter concept and an enhanced life time have been of particular importance. This allows to fulfill the requirements within the bounds of technical reliability, improved installation and customer-/service friendliness for manufacturer of concealed floor heating and cooling systems. Additional differentiations through customer specific versions are possible.
The OEM-Actuator 24 V is controlled by a 24 V room thermostat with two-point output or pulse-width modulation.

## Features

- OEM design
- Compact size, small dimensions
- Available in normally closed (NC) or normally open (NO)
- Patented 100% protection against leaky valves
- All around function indicator
- Maintenance-free
- Noiseless
- High functional safety and long expected service life
- Low power consumption
- 360° installation position
- Snap-on installation
- Valve-adapter concept
- Adaptation check on valve

## Application

The OEM-Actuator serves for optimum control of valves on heating circuit distributors. Control is done a room thermostat with two-point output or pulse-width modulation.

## General Information

**Scope of Supply (standard)**
- 1x OEM-Actuator (Version: normally closed)
- 1x cable 1 meter
- 1x installation manual with ten languages

**Alternative Version:**
- Version normally open

**Type**
A 4004: Version 24 V – normally closed
A 4104: Version 24 V – normally open

**Optional available extensions:**
- First-Open function (only for normally closed)
- non halogen connection cable
- Other cable length are available

**Accessories**
A valve adapter suiting your application can be enclosed in the actuator packing.

**Customer-specific Version**
Customer-specific versions are possible on request.

**Ordering Information**
Our staff will be glad to assist you in finding the actuator fitting your application.

## Functions

**In General**
The actuator mechanism of the OEM-Actuator uses a PTC resistor-heated elastic element and a compression spring. The wax element is heated by applying the operating voltage and moves the integrated piston. The force generated by the movement is transferred on the piston lifter and thus opens and closes the valve.

## Standard Version

**Normally Closed (valve closed)**
The valve is opened steadily by the piston motion upon switching on the operating voltage and after expiry of the dead time. The wax element cools down after the operating voltage is cut and after expiry of the hold time, the valve is closed evenly by the closing force of the compression spring.
The closing force of the compression spring is matched to the closing force of commercially available valves and keeps the valve normally closed.

**Valve-Adapter-Concept**
A valve-adapter concept guarantees a perfect match of the actuator to almost any valve bottom or heating circuit distributor available on the market. Simply snap-on the OEM-Actuator to the pre-installed valve adapter.

**Function Display**
The function display of the OEM-Actuator (all-round display) allows identifying the operating condition (valve open or closed) at a glance.

## Extended Version

**First-Open function (for NC only)**
In its delivery condition, the OEM-Actuator is kept open when de-energised due to the First-Open function (filling). This enables heating operation during the carcass construction phase even when the electric wiring is not yet complete. During the later electrical start-up, the First-Open function is unlocked by applying the operating voltage for more than 6 minutes. The OEM-Actuator will then be completely operable.

## Alternative Version

**Normally Open (valve open)**
In case of the normally open version, ram motion is redirected by mechanical means, resulting in precisely opposite actuator function.



288 Verge Street Springfield, MA 01129 phone 413.543.8733 fax 413.543.8737
www.hydronicalternatives.com E-mail : info@hydronicalternatives.com

## Technical Data

| | |
|---|---|
| Version | normally closed / normally open |
| Voltage | 24 V AC/DC, +20%...–10%, 0–60 Hz |
| Max. inrush current | 250 mA during 2 min max. |
| Operating current | 75 mA |
| Operating power | 1.8 W |
| Closing and opening times | approx. 3 min. |
| Actuator travel | 0.16 inch [4 mm] |
| Actuating force | 100 N ± 5% |
| Fluid temperature | 32 - 212°F [0 - 100 °C] 1) |
| Storage temperature | -13 to +140°F [-25 to +60°C] |
| Ambient temperature | 32 to +140°F [0 to +60°C] |
| Degree | IP 54 2) |
| CE conformity according to | EN 60730 |
| Housing / housing color | Polyamide / grey |
| Weight | 100 g with a 1 m connecting cable |
| Connecting cable / length 3) | 2 x 0.75 mm² PVC, grey / 3.3 ft [1 m] |

OEM-Actuator with valve adapter

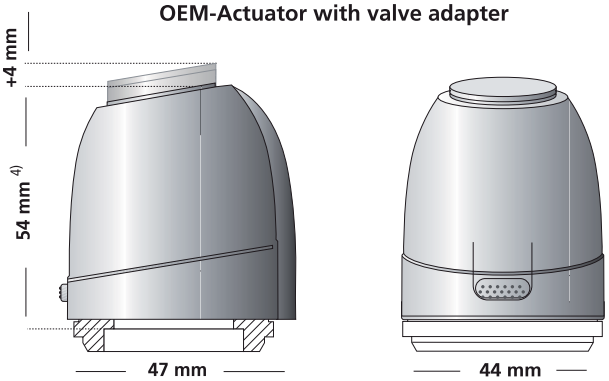


1) in dependence of the adapter even higher
2) in all installation positions
3) special length on demand, but < 16ft [5.0 m]
4) referring to standard valves

## Characteristic Curves

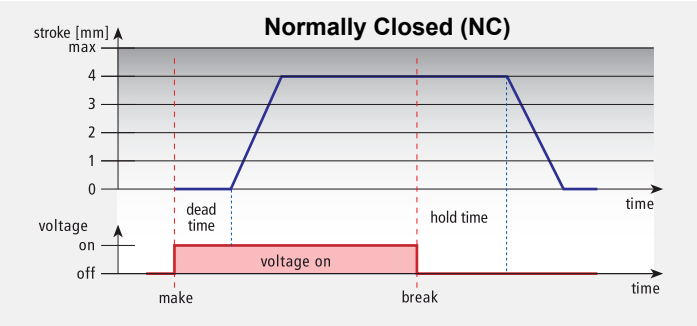


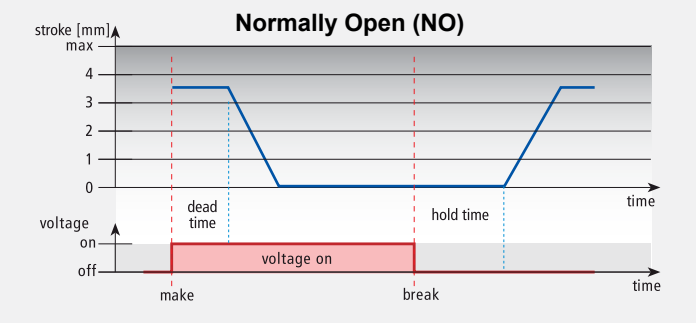


## Connections Overview

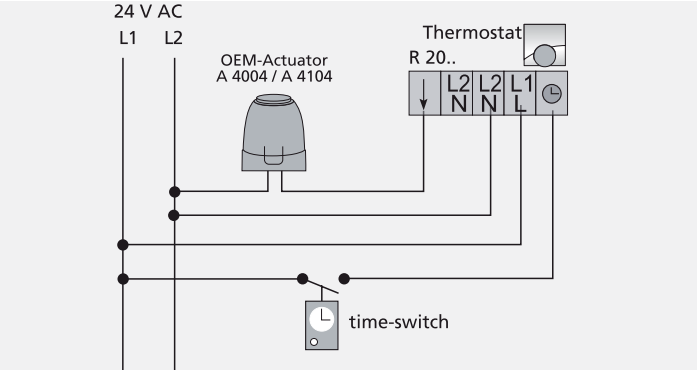


Calculation of maximum cable length (copper cable) for 24 V rated voltage

L = K x A / n

A Conductor cross-section in mm²
n Number of Actuators
K Constant (269 m/mm²)
L Cable length in m

We recommend the following cables for installing a 24 V system:

| | | |
|---|---|---|
| Bell wire: | Y(R) | 0,8 mm² |
| Light plastic-sheathed cable: | NYM | 1,5 mm² |
| Flat webbed building wire: | NYIF | 1,5 mm² |

**Transformer**:
A safey isolating transformer according to EN 60335 must always be used. Transformer dimensioning results from the making capacity of the OEM-Actuators.
Rule-of-thumb formula: $P_{Transformer} = 6\ W \times n$
n = number of OEM-Actuators

## Installation Positions

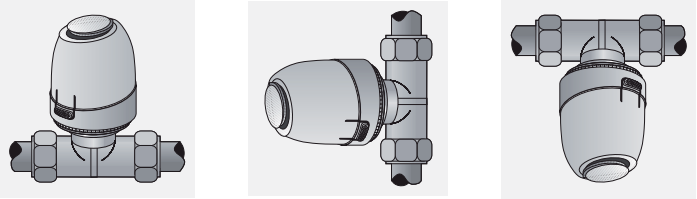

Prefered installation positions of the OEM-Acutator are vertical and horizontal. An up-side down position may reduce product life through special circumstances (e.g. contaminated water).

## Valve Adaptation

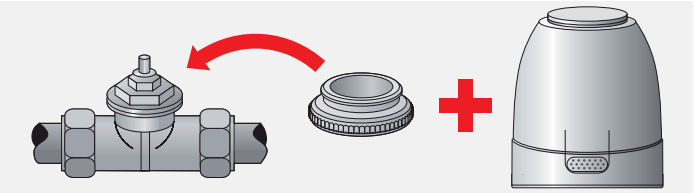

Valve adaptation is archived by a valve adapter which is available in different versions to suit the most common valve bottoms and heating circuit distributors (please consider when ordering).


288 Verge Street Springfield, MA 01129 phone 413.543.8733 fax 413.543.8737
www.hydronicalternatives.com E-mail : info@hydronicalternatives.com